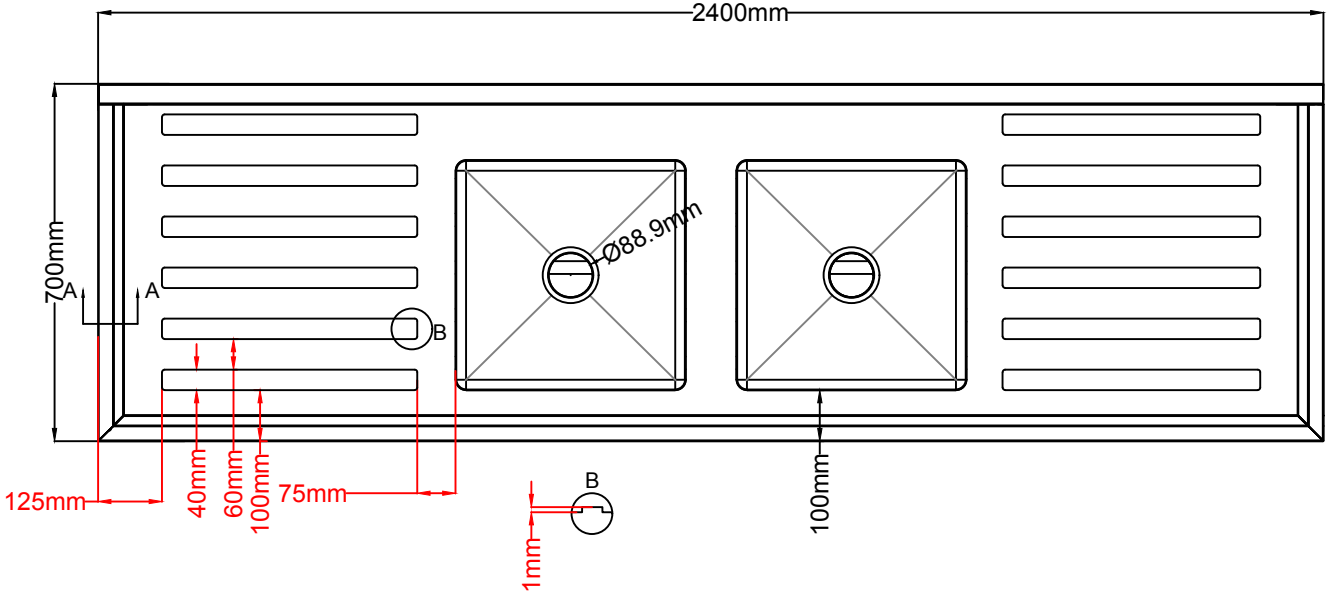

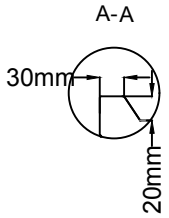

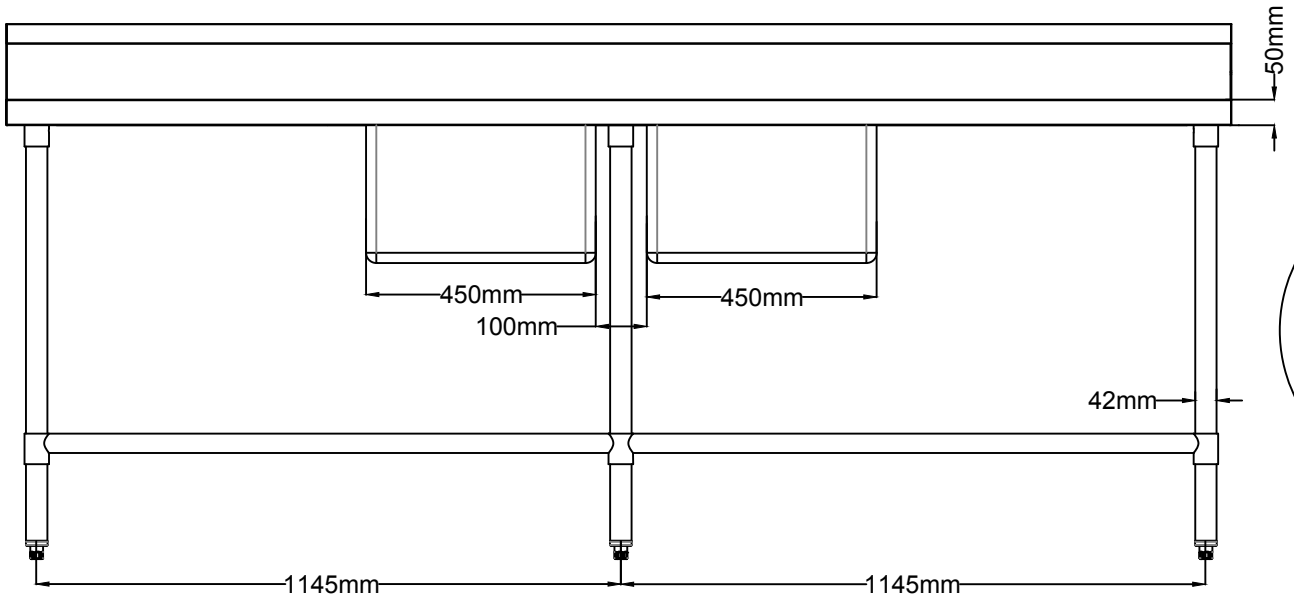

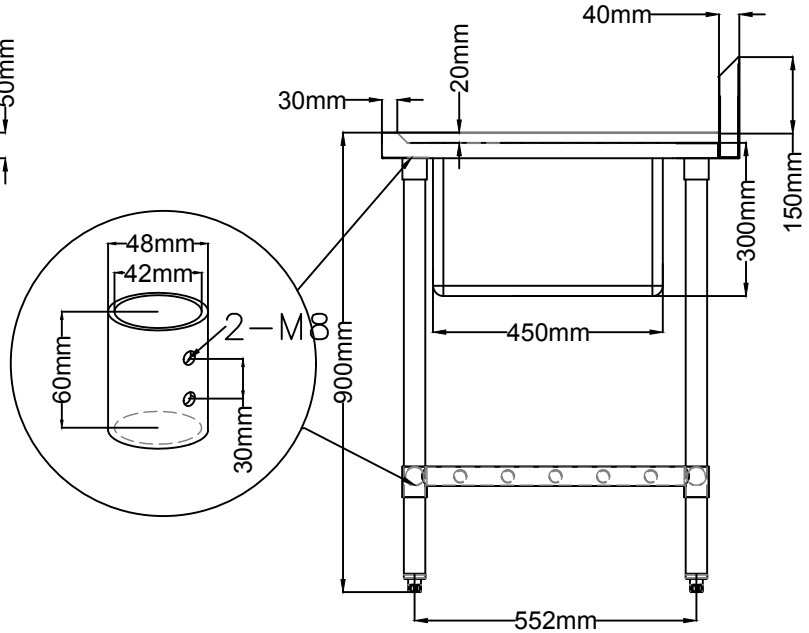

DSB7-2400C/A	QUANTITY:	
DRAWN BY: GAO	Federal Hospitality Equipment	
APPROVED BY: HENRY	DATE: 06/24/25	PAGE: 1 OF 1